Instruction Manual

ZIRCONIA OXYGEN ANALYZER CONVERTER (SINGLE-CHANNEL TYPE)

TYPE: ZRM

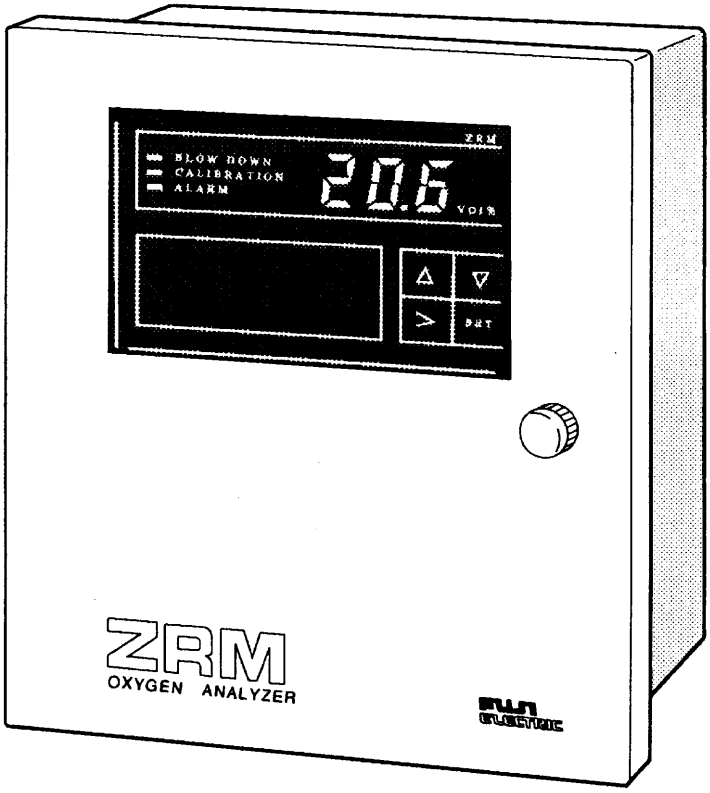

Fuji Electric Systems Co., Ltd.

INZ-TN507849-E

CONTENTS

1. OUTLINE

1.1 Internal construction

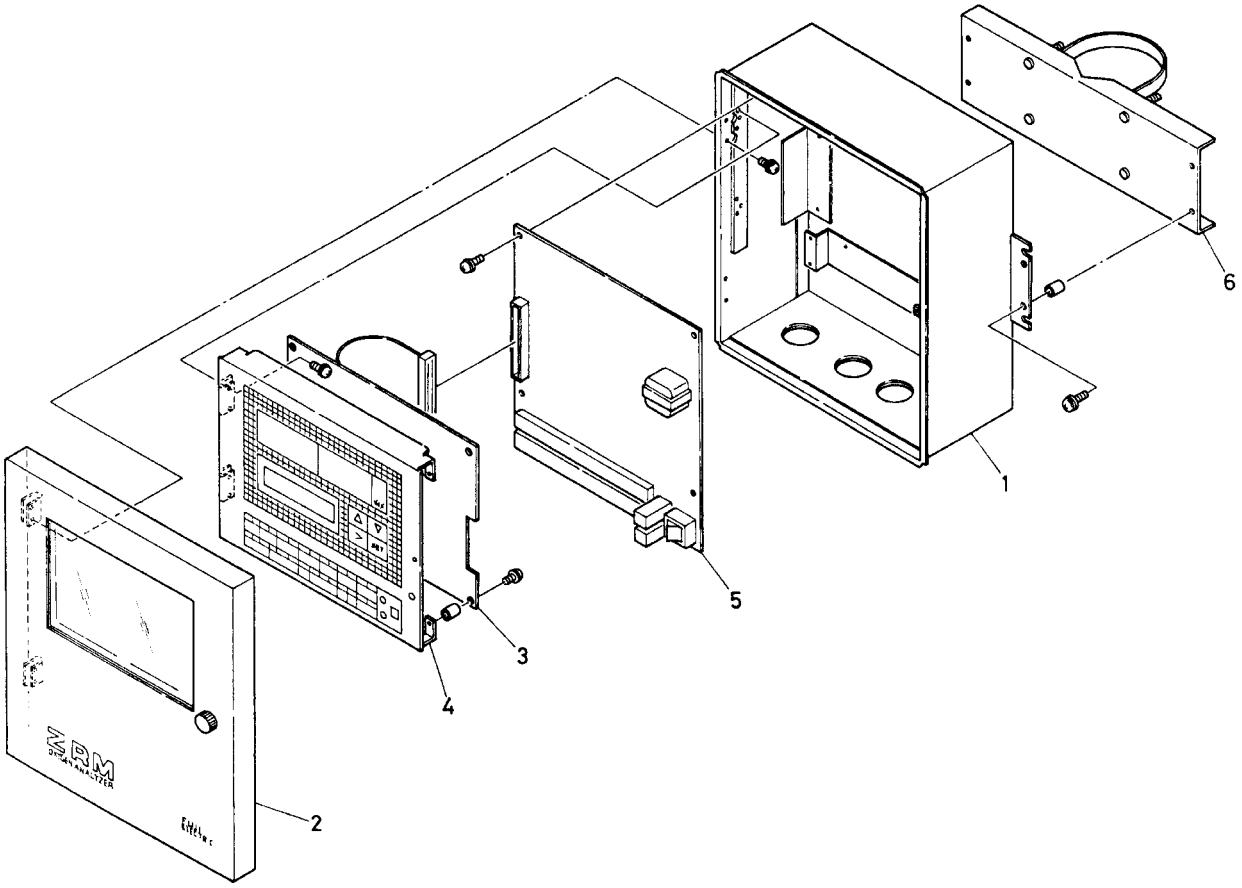

1.2 Layout of printed circuit board

Layout of printed circuit board (1/2)

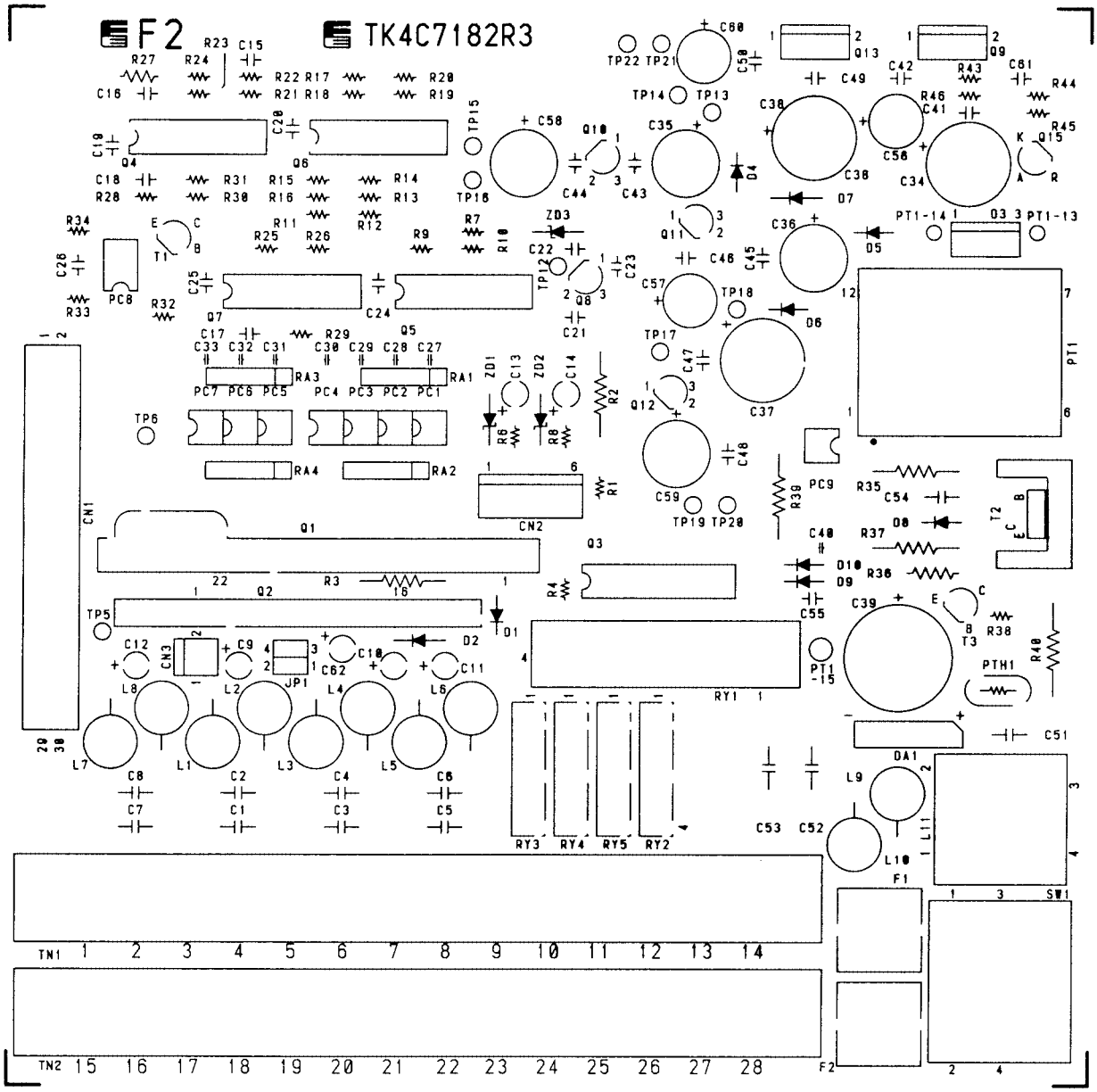

Layout of printed circuit board (2/2)

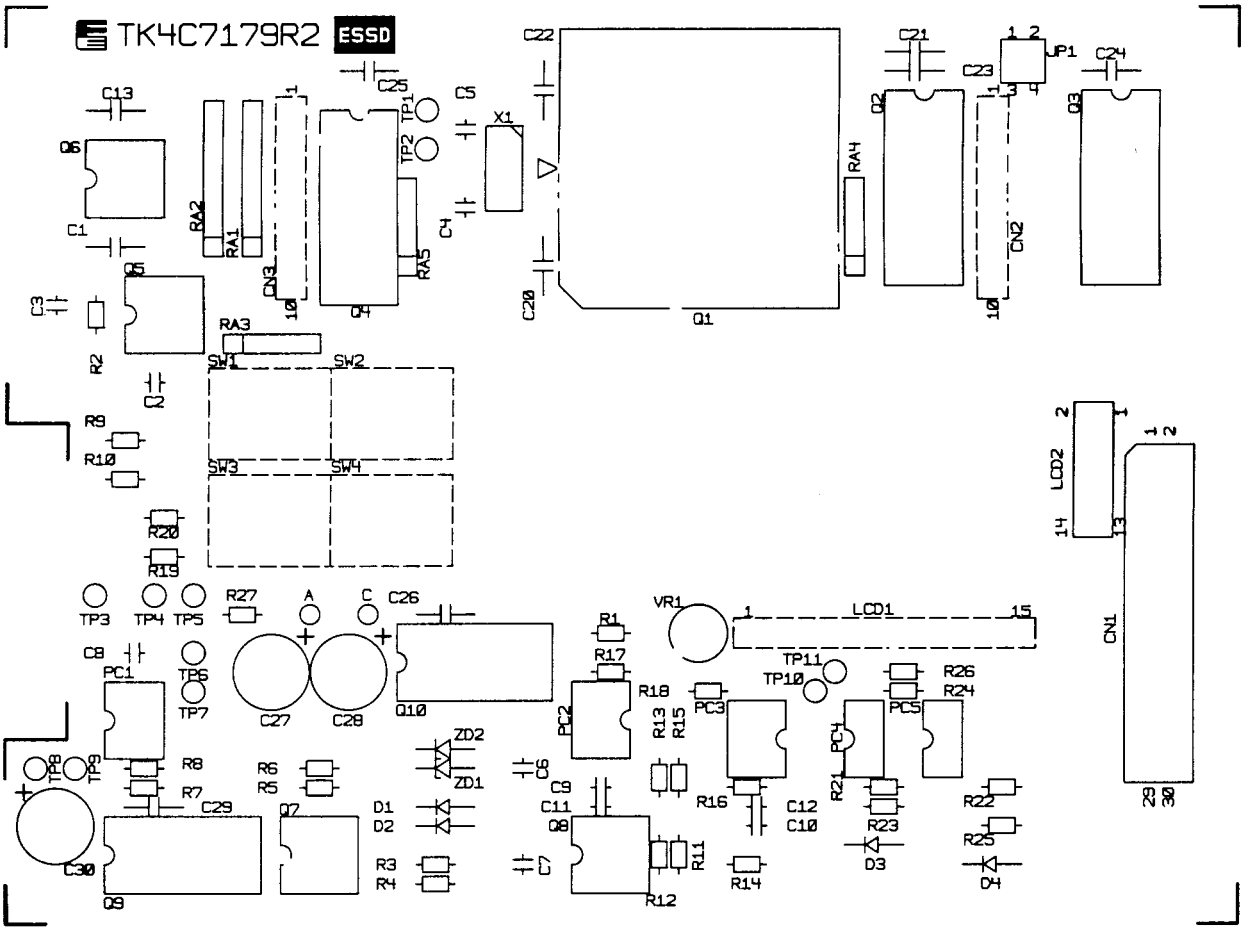

2. ADJUSTMENT

2.1 Instruments required for adjustment

Item	Specification	Quantity
Voltage generator	0 to 2000 mV DC Min. resolution 0.1 mV	1 pc. or 3 pc.
Digital multimeter	Voltage measurement : 0 to 20 V DC Min. resolution 0.1 mV Current measurement : 0 to 200 mA DC Min. resolution 0.01 mA	1 pc.

2.2 Flow of adjustment

Adjustment flow of ZRM is as follows.

(1) Check of wiring connection

(2) Power On

(3) Check of voltage

(4) “Set” mode

(5) Individual adjustment

(6) Calibration by voltage generator

3. WIRING CONNECTION AND CHECK

3.1 Check of wiring connection

Please check the connectors are correctly mounted.

3.2 Connection when adjustment is being done

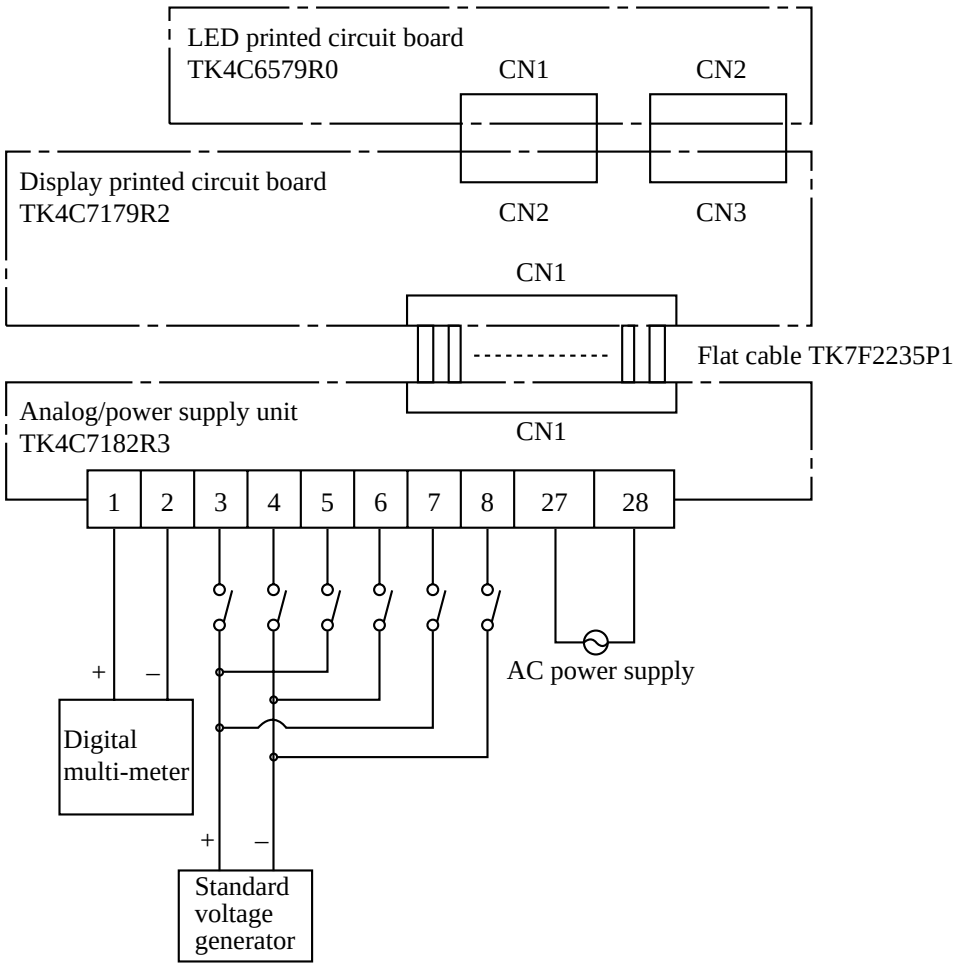

4. POWER ON AND VOLTAGE CHECK

4.1 Power ON

Turn on the “POWER SWITCH” and adjust LCD contrast by VR1 on display printed circuit board, then LCD display will change as follows.

Fuji Electric Oxygen Analyzer	In approx. 3 seconds →	MEASURE 0～25.0 Vol % O_2

4.2 Voltage check

Analog/power supply board --------TK4C7182 R3

TP13-TP14	5 ± 0.2V
TP15-TP16	15 ± 0.3V
TP17-TP18	15 ± 0.3V
TP19-TP20	15 ± 0.3V
TP21-TP22	5 ± 0.2V

Display (CPU) unit ----------TK4C7179 R2

TP6-TP7	5 ± 0.2V
TP8-TP9	5 ± 0.2V

5. SET MODE

5.1 How to change display from “MEASURE” mode to “SET” mode.

Key Operation procedure

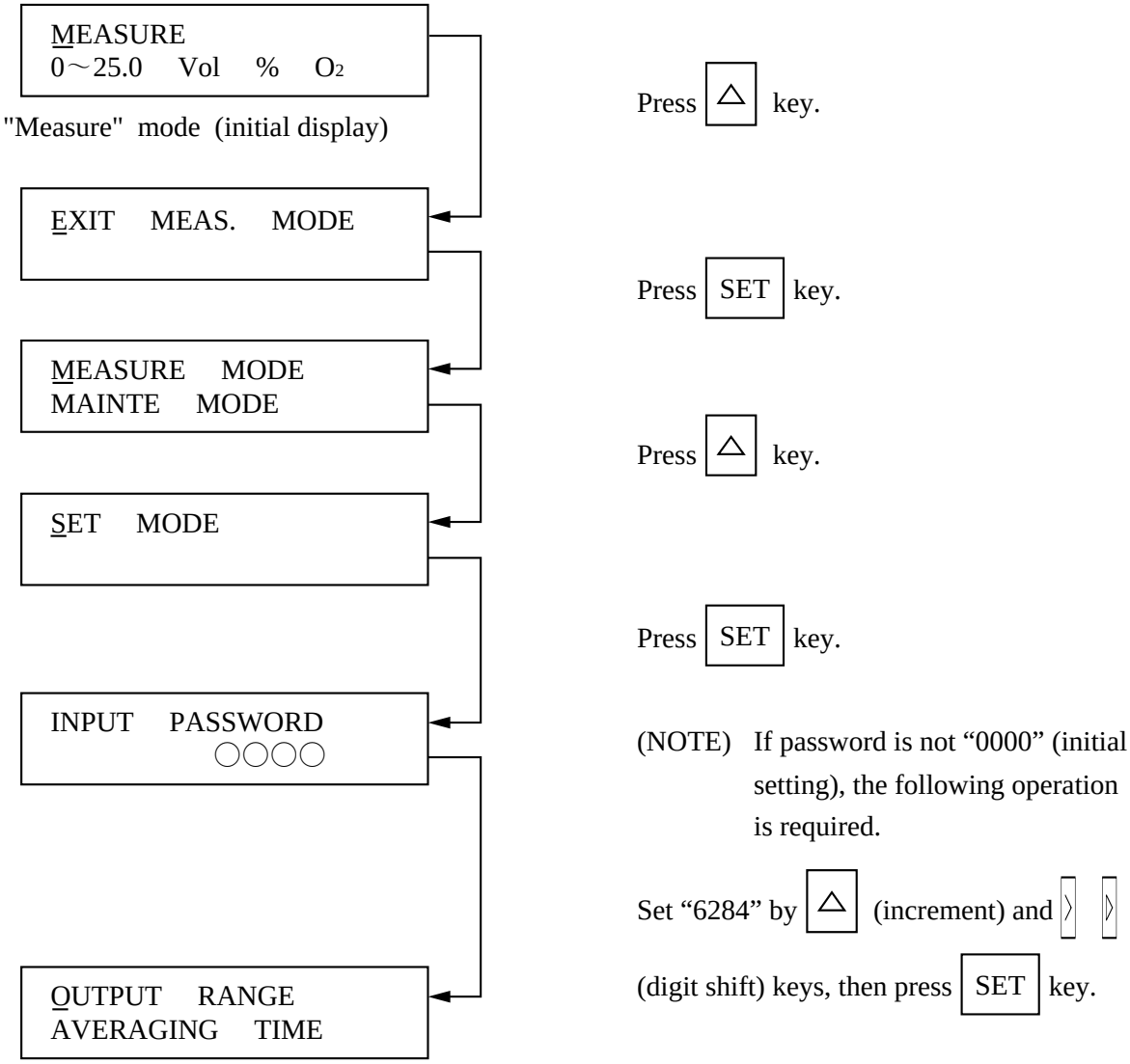

5.2 Initial setting

List 5.1 shows “Initial Set Value” (factory setting).

If any troubles happen during operation, it is recommended that you may check each value with the listed initial set value.

Table 5.1 List of Initial Set Values (factory setting)

Items	Display	Set value
Password	PASSWORD SET	0000
Output range	OUTPUT RANGE	25.0 %O_2
Averaging time	AVERAGING TIME	002 SEC
Span gas set	SPAN GAS SET	20.6 %O_2
Zero gas set	ZERO GAS SET	1.01 %O_2
Meas. wait time	MEAS. WAIT TIME	010 SEC
Auto blow cycle	AUTO BLOW CYCLE	00 H 00 MIN
Blow down time	BLOW DOWN TIME	0 MIN 30 SEC
High alarm	HIGH ALARM	55.0 %O_2
Low alarm	LOW ALARM	0.01 %O_2
Output hold	OUTPUT HOLD	NO
D. out select	D. Out Select	DO. 2 MAINTENANCE DO. 1 BLOW DOWN DO. 3 ZERO VALVE DO. 4 SPAN VALVE
Comm. station No.	Station NO.	1
Communication condition	Comm. Select	Boud 9600 Bit 8 Parity NONE Stop 1
Choice of TC	Thermo Couple	R
Detector temp. setting	Temp. Control	800 ℃
Sub input select	Sub Input Select	R
A. out select	A. Out Select	4 to 20 mA Note: Factory setting depends on model code. (5th digit “B” ⇒ 4 to 20mA DC “E” ⇒ 0 to 1V DC)
Auto calibration cycle	AUTO CAL. CYCLE	00 DAY 00 H

6. ADJUSTMENT (ADJ MODE)

6.0 How to move “Adj” mode

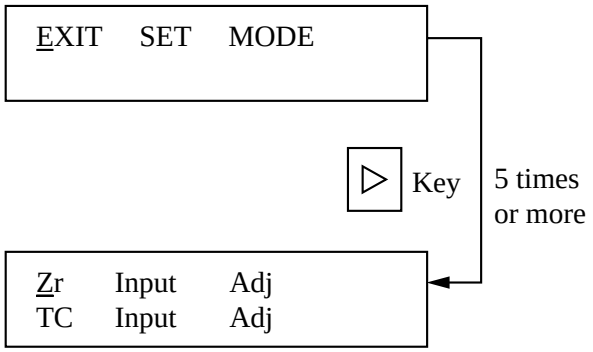

After 5.1, the following key operation is required.

Press ▷ key 5 times, then display changes to “Adj. mode”.

6.1 Zirconia input signal adjustment (ZERO)

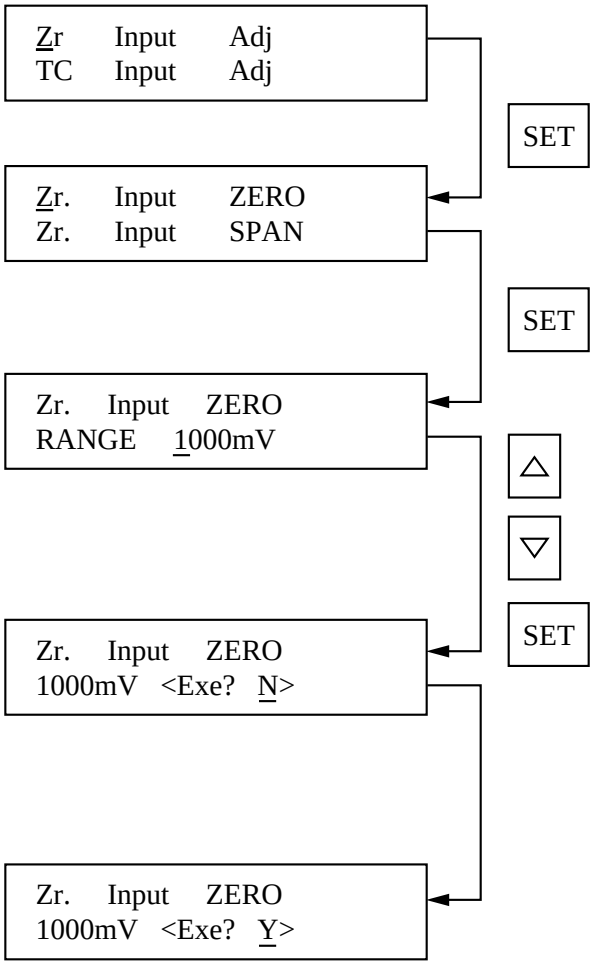

At the initial display of adjustment mode shown on the left, press SET key.

Press SET key, when cursor “_” is under “Zr. Input ZERO”

Press △ or ▽ key, and choose range to adjust.

1000mV ⇔ 250mv ⇔ 100mV ⇔ (1000mV)

Then press SET key.

Input 0mV at terminals No. ⑤ and ⑥, and select “Y” by pressing △ or ▽ key. Wait for 20 seconds, and then press SET key.

Adjust other ranges (250mV and 100mV) by same procedure.

6.2 Zirconia input signal adjustment (SPAN)

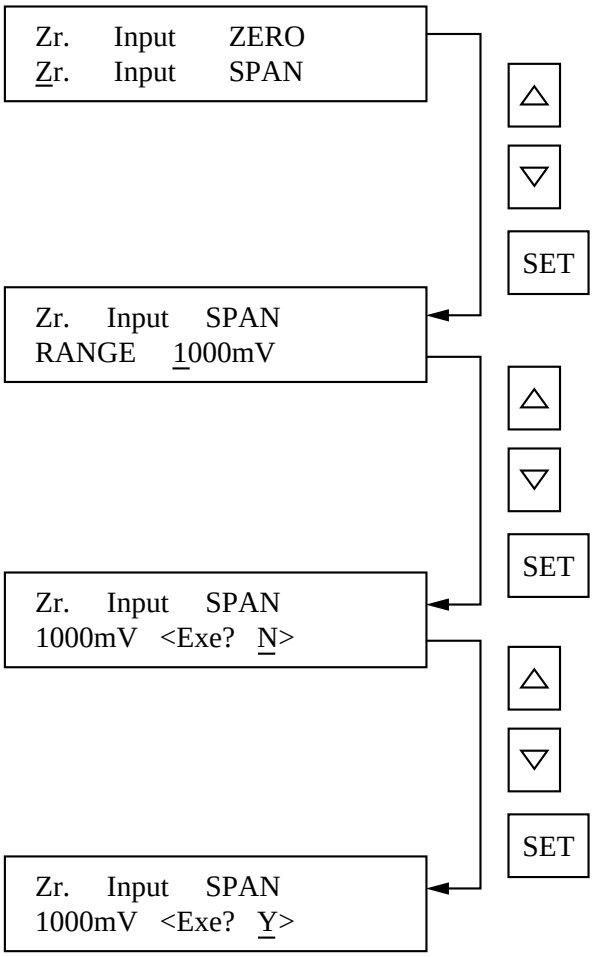

Select "Zr. Input Span" mode by pressing SET key at display shown on the left.

Select range to adjust by △ or ▽ key.

1000mV ⇔ 250mV ⇔ 100mV ⇔ −50mV ⇔ (1000mV)

Then press SET key.

Input actual voltage shown in LCD display at terminals No. ⑤ and ⑥, and select "Y" by pressing △ or ▽ key.

Wait for 20 seconds, and press SET key.

Adjust other ranges (250mV, 100mV and −50mV) by same procedure.

6.3 Temperature input adjustment

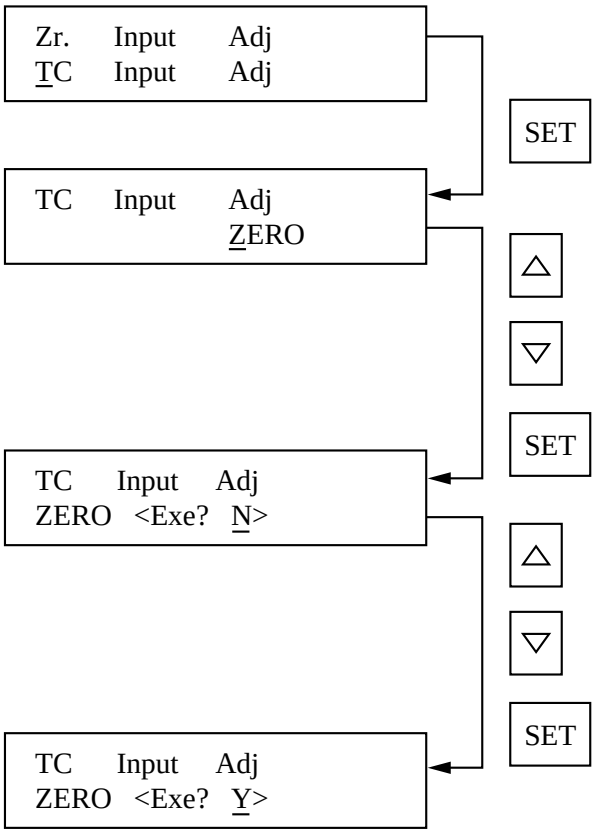

Select "TC Input Adj" mode by pressing SET key at display shown on the left.
Select "ZERO" by △ or ▽ key, and then press SET key.

Input 0mV at terminals No. ⑦ and ⑧.
Select "Y" in the display shown on the left.
Wait for 20 seconds, and then press SET key.

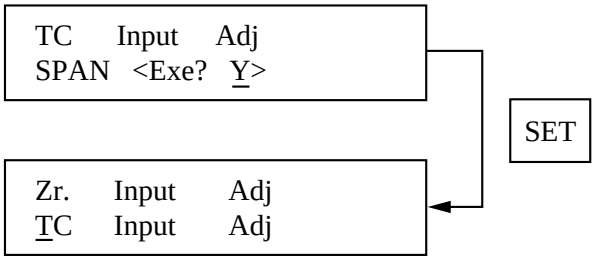

Select "SPAN" and "Y" by the same procedure as "ZERO" mode.
Input 50mV at terminals No. ⑦ and ⑧.
Wait for 20 seconds, and then press SET key.

6.4 Current output adjustment (4 to 20mA)

Analog output selection

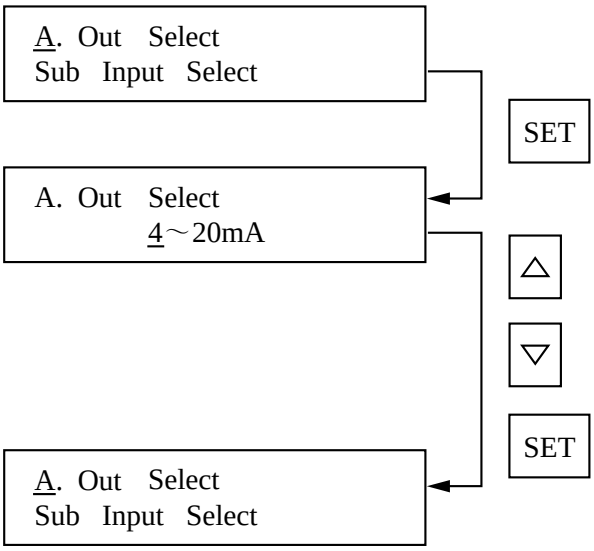

Select "A. Out Select" mode by pressing SET key at display shown on the left. Select "4 ~ 20mA" by △ or ▽ key, and then press SET key.

Note : Be sure that positions of jumper pins on analog/power supply board (TK4C7182 R3) are as follows.

①——② <short circuit>

③——④ <short circuit>

Adjustment of current output at 5% point

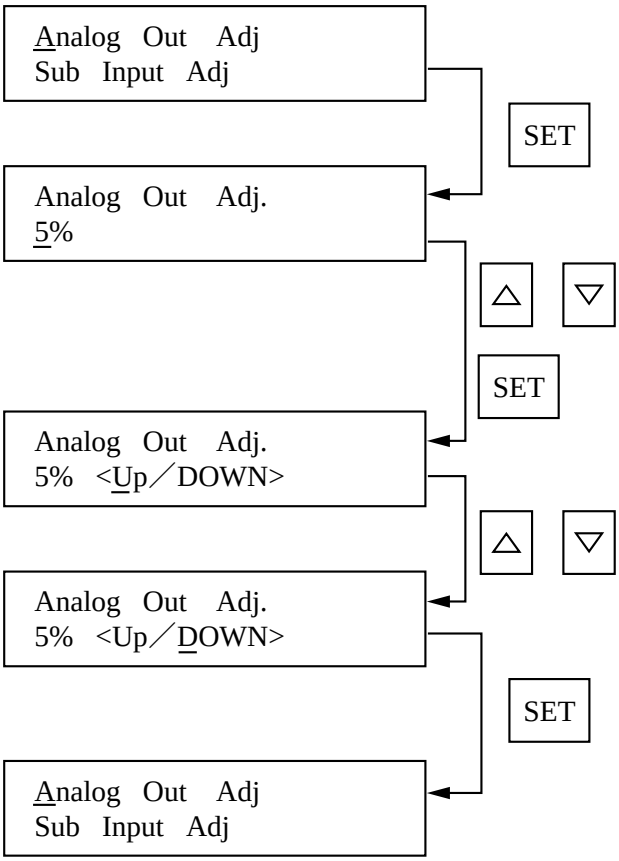

Select "5%" by pressing △ or ▽ key, and then press SET key.

Connect current meter at terminals No. ① and ②, and press △ or ▽ key so that current meter shows 4.8±0.05mA.

After adjustment, press SET key, and go to adjustment at 100% point.

Adjustment of current output at 100% point

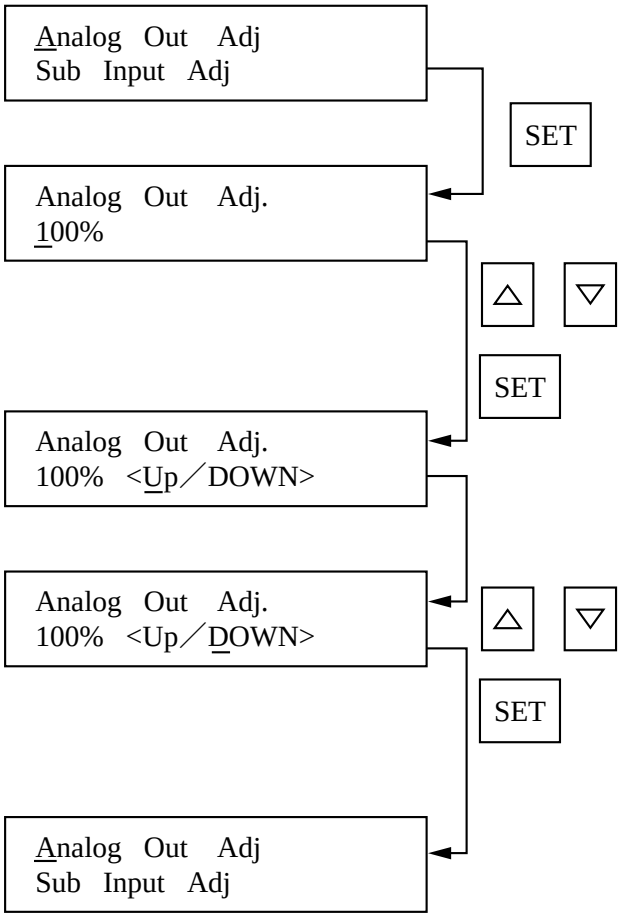

Select "Analog Out Adj" mode, by pressing SET key at diaplay shown on the left. Select "100%" by pressing △ or ▽ key.

Connect current meter at terminals No. ① and ②, and press △ or ▽ key so that current meter shows 20.0±0.05mA.

After adjustment, press SET key.

6.5 Adjustment of voltage output (0 to 1V)

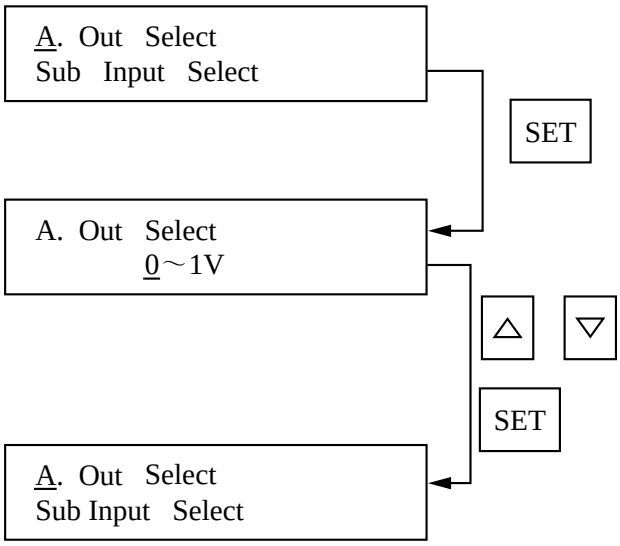

Select "A. Out Select" mode by pressing SET key at display shown on the left. Select "0 ~ 1V" by pressing △ or ▽ key, and then press SET key.

Note : Be sure that positions of jumper pins on analog/power supply board (TK4C7182 R3) are as follows.

①——③ <short circuit>

②——④ <short circuit>

Adjustment of voltage output at 5% (0 to 1V)

```
Analog   Out    Adj.
5%   <Up／DOWN>
```

Select "5%" by pressing △ or ▽ key, and press SET key.

Connect voltage meter at terminals No. ① and ②, and press △ or ▽ key so that voltage meter shows 50±0.5mV.

After adjustment, press SET key.

Adjustment of voltage output at 100% (0 to 1V)

```
Analog   Out    Adj.
100%   <Up／DOWN>
```

Select "100%" by pressing △ or ▽ key, and press SET key.

Connect voltage meter at terminals No. ① and ②, and press △ or ▽ key so that voltage meter shows 1000±0.5mV.

After adjustment, press SET key.

6.6 Sub input adjustment

Sub input adjustment (ZERO)

Note : Required only if 6th digit in model code is “B” or “C”.

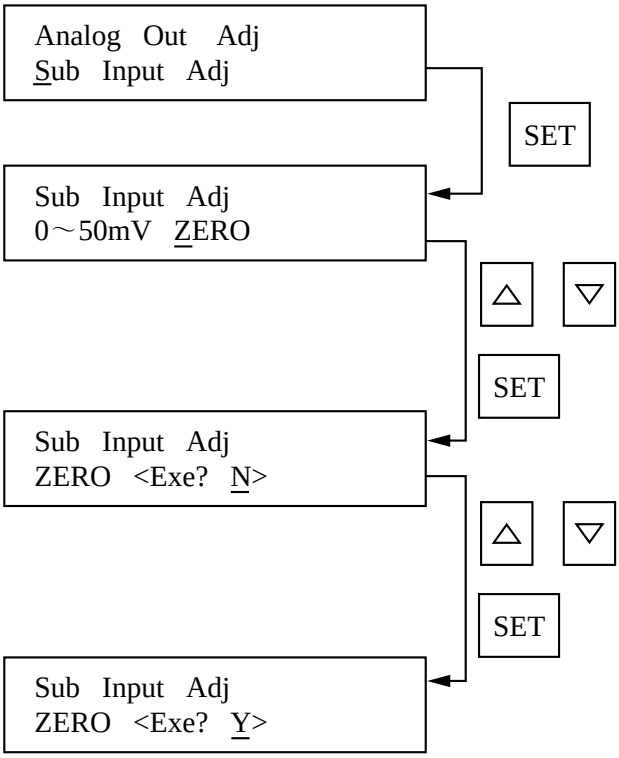

Select “Sub Input Adj” mode by pressing SET key at the display shown on the left.

Select “Zero” by pressing △ or ▽ key, and then press SET key.

Input 0mV at terminals No. ③ and ④ .

Select “Y” by pressing △ or ▽ key.

Wait for 20 seconds, and press SET key.

Sub input adjustment (SPAN)

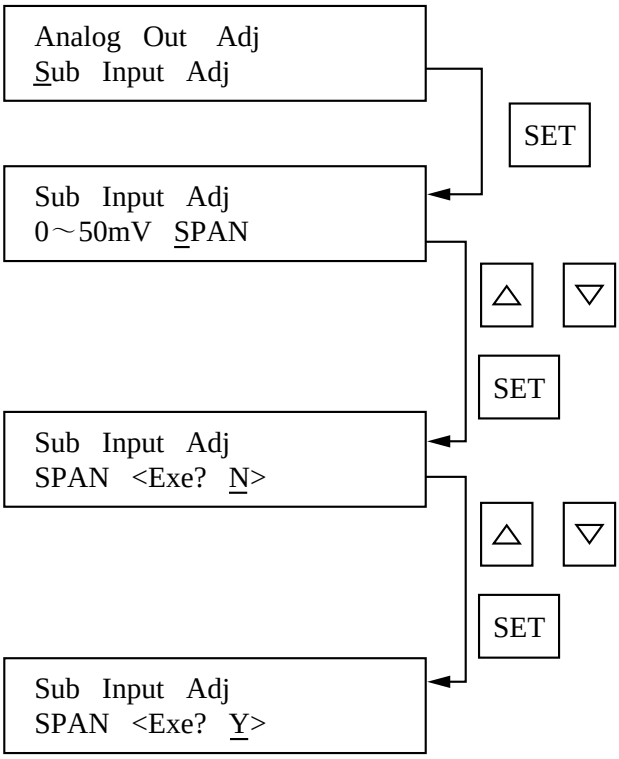

Select “Sub Input Adj” mode by pressing SET key at display shown on the left.

Select “SPAN” by pressing △ or ▽ key and then press SET key.

Input 50mV at terminals No. ③ and ④ , and select “Y” by pressing △ or ▽ key.

Wait for 20 seconds, and then press SET key.

6.7 Procedure of contact output setting

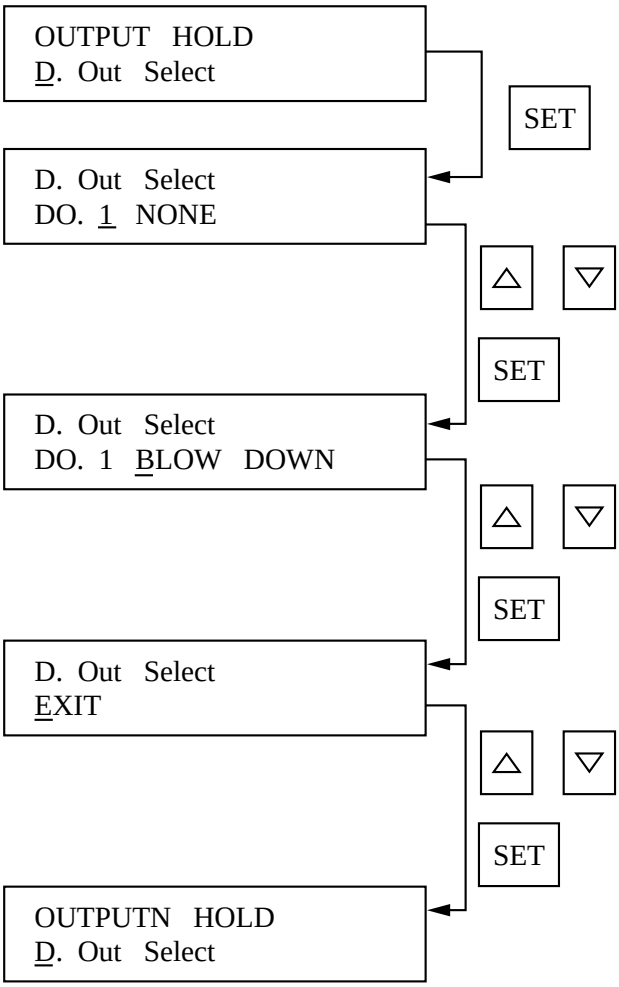

Note : Firstly, move from "Adj" mode to "Set" mode.

Select "D. Out Select" mode, by pressing SET key.

Select DO. number by pressing △ or ▽ key and press SET key.

Select setting item for each D.Out and press SET key.

After setting all items, select "EXIT" and press SET key.

List 6.1 Factory (initial) setting

Item	LCD display	Teminal No.
DO. 1	BLOW DOWN	⑪ ⑫
DO. 2	MAINTENANCE	⑨ ⑩
DO. 3	ZERO VALVE	㉒ ㉓
DO. 4	SPAN VALVE	㉔ ㉓

List 6.2 Adjustable items

Item	LCD display
NONE	NONE
BLOW	BLOW DOWN
MAINTENANCE	MAINTENANCE
H/L ALARM	H/L ALARM
L ALARM	LOW ALARM
H ALARM	HIGH ALARM
ZERO VALVE	ZERO VALVE
SPAN VALVE	SPAN VALVE
FAULT	FAULT

7. CALIBRATION BY VOLTAGE GENERATOR

7.1 Setting of calibration gas concentration

Note : Firstly, change display to “SET” mode (see page 7).

```
SPAN   GAS   SET
        20.600  %O2
```

Refering to outline of key operation (see Appendix B), select “Span Gas Set” mode and then input 20.600 %O_2.

```
ZERO   GAS   SET
        01.010  %O2
```

Refering to outline of key operation (see Appendix B), select “Zero Gas Set” mode and then input 01.010 %O_2.

7.2 Manual calibration

Note : Firstly, change display to “MAINTE MODE” (see page 7).

```
MANUAL   CAL   SPAN
<START?   Y>
```

Refering to outline of key operation (see Appendix B), select “MANUAL CAL SPAN” mode.

Input 0mV at terminals No. ⑤ and ⑥ , and then press SET key so that span calibration will be done.

```
MANUAL   CAL   ZERO
<START?   Y>
```

Refering to outline of key operation (see Appendix B), select “MANUAL CAL ZERO” mode.

Input 66.45mV at terminals No. ⑤ and ⑥ , and then press SET key so that zero calibration will be done.

Appendix A. Key operation flow of adjustment mode

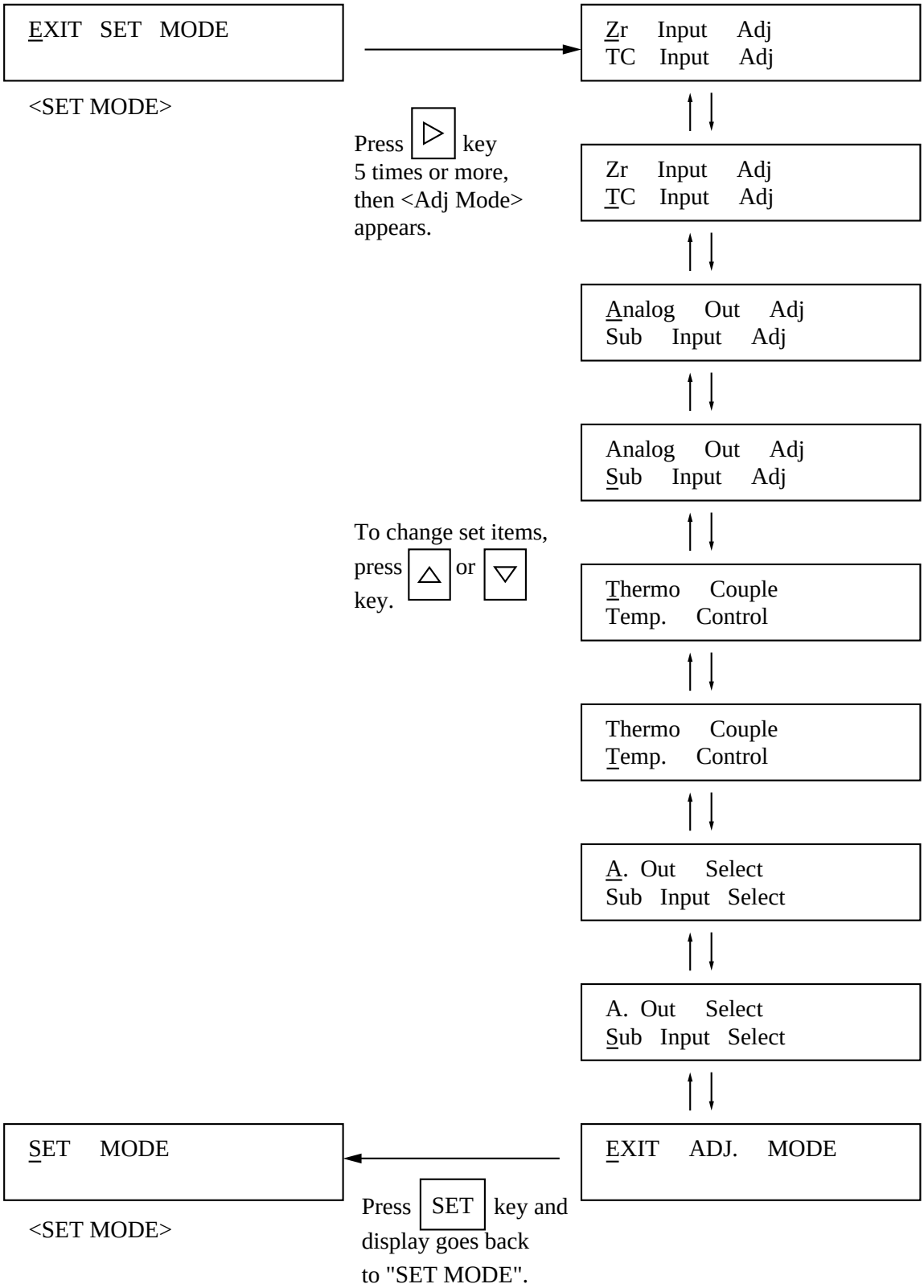

Appendix B. Outline of key operation

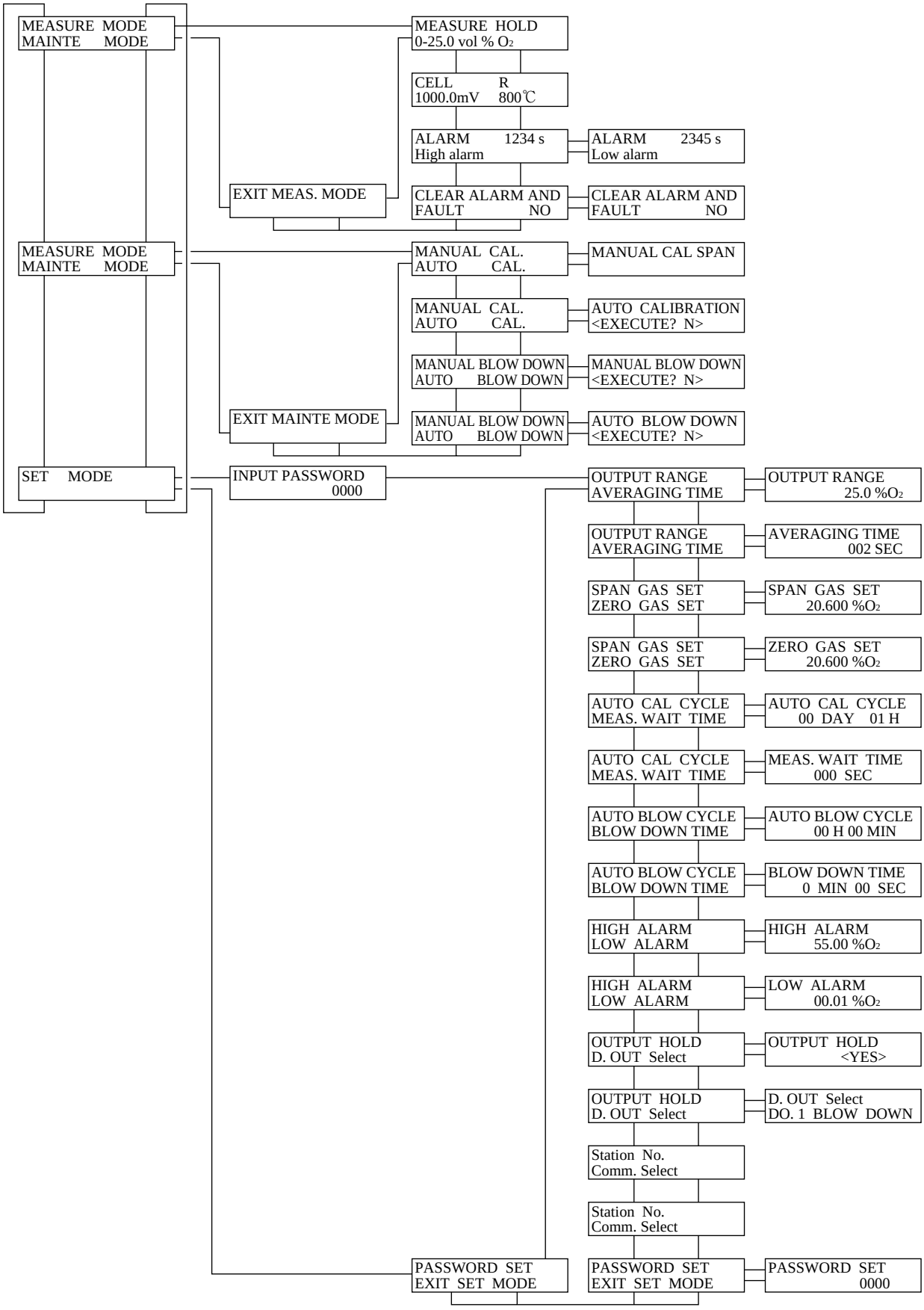

Appendix C. Circuit diagram

Single O_2 Analyzer Display Board (1/2)

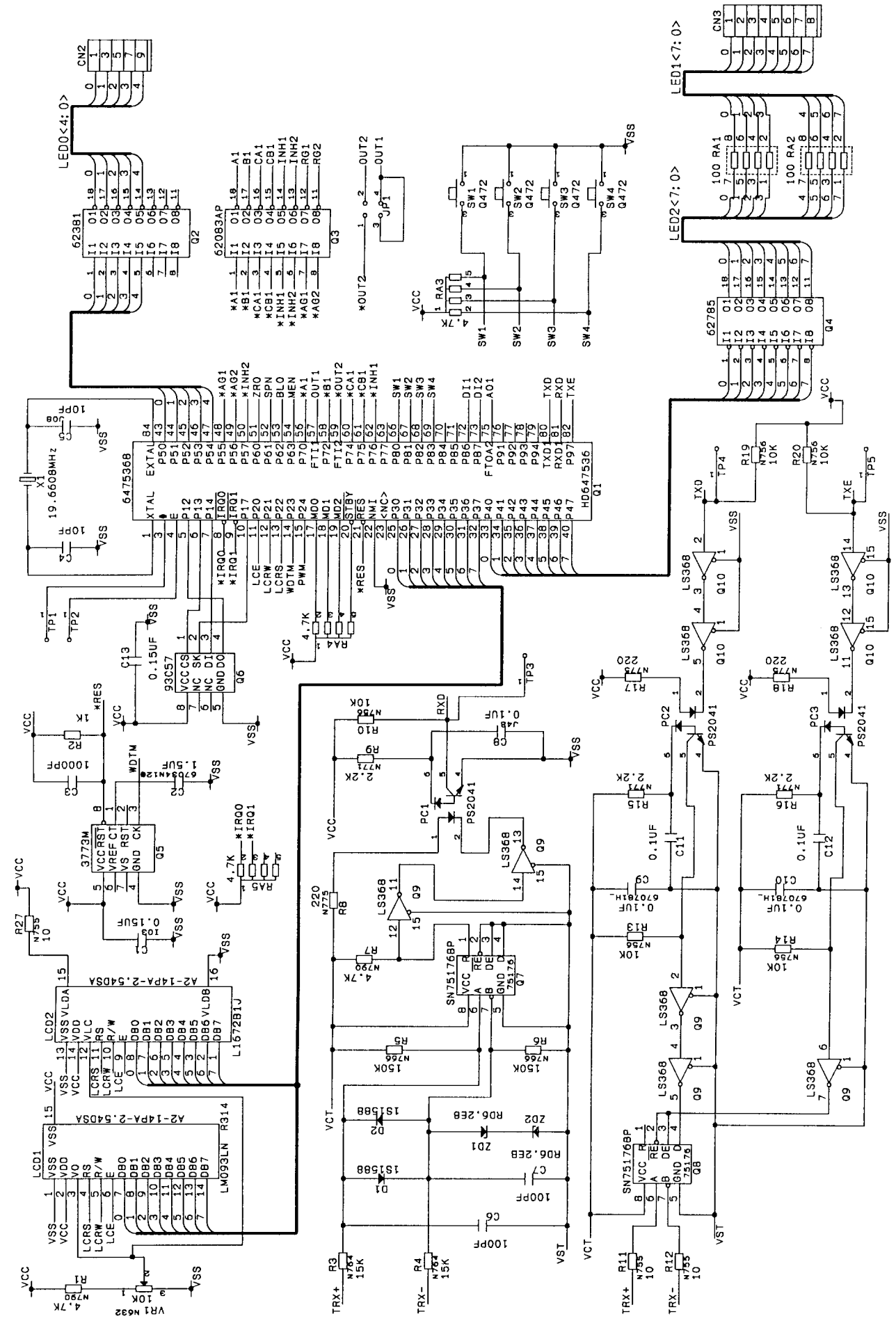

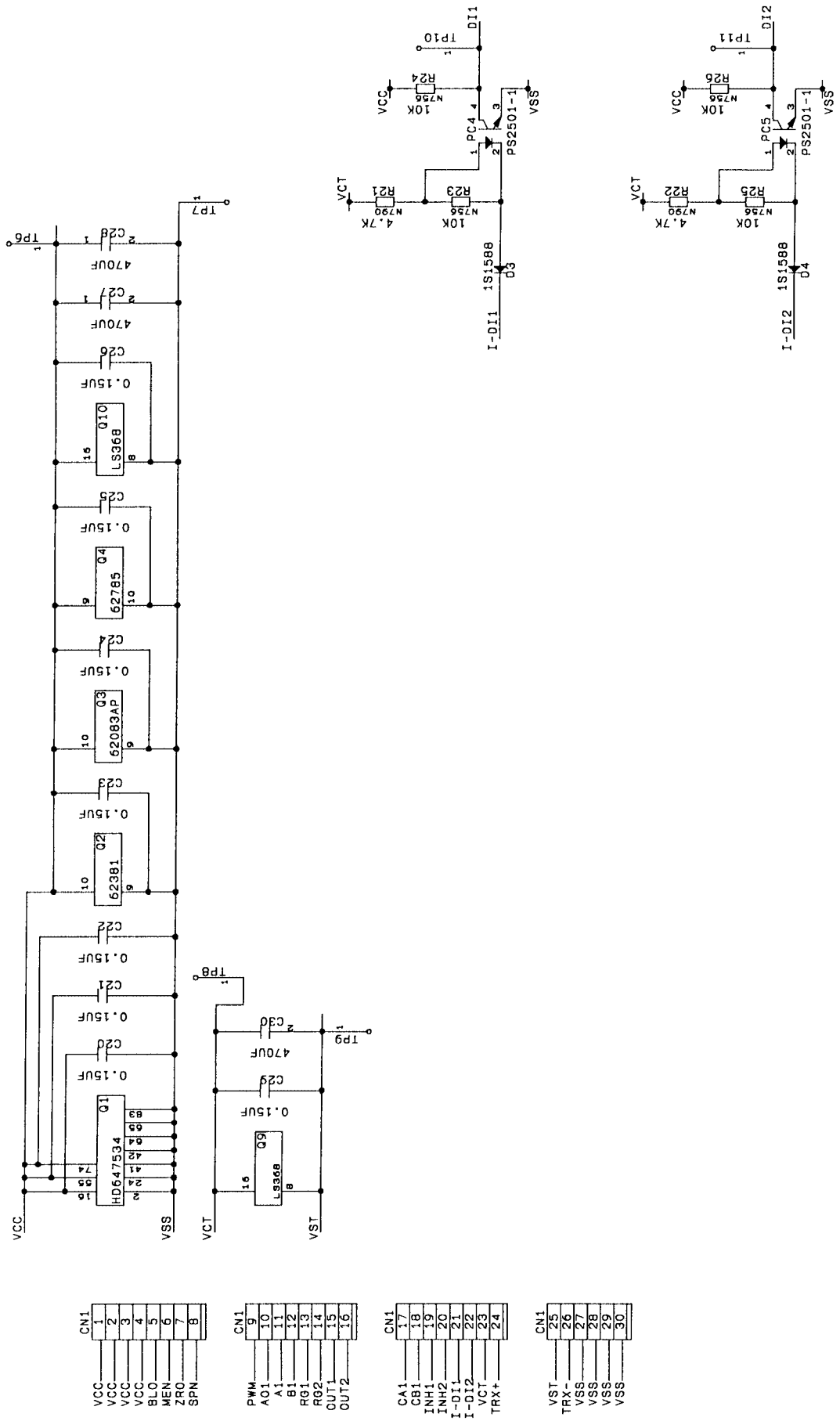
VCC
VSS
VCT
VST
HD647534
Q1
LS368
Q9
62381
Q2
62083AP
Q3
62785
Q4
LS368
Q10
0.15UF
470UF
TP7
TP6
TP8
TP9
CN1
PWM
AO1
A1
B1
RG1
RG2
OUT1
OUT2
CA1
CB1
INH1
INH2
I-DI1
I-DI2
VCT
TRX+
VST
TRX-
VSS
BLO
MEN
ZRO
SPN
PC4
PC5
PS2501-1
1S1588
D3
D4
R21
R22
R23
R24
R25
R26
N790
N756
10K
4.7K
TP10
TP11
DI1
DI2

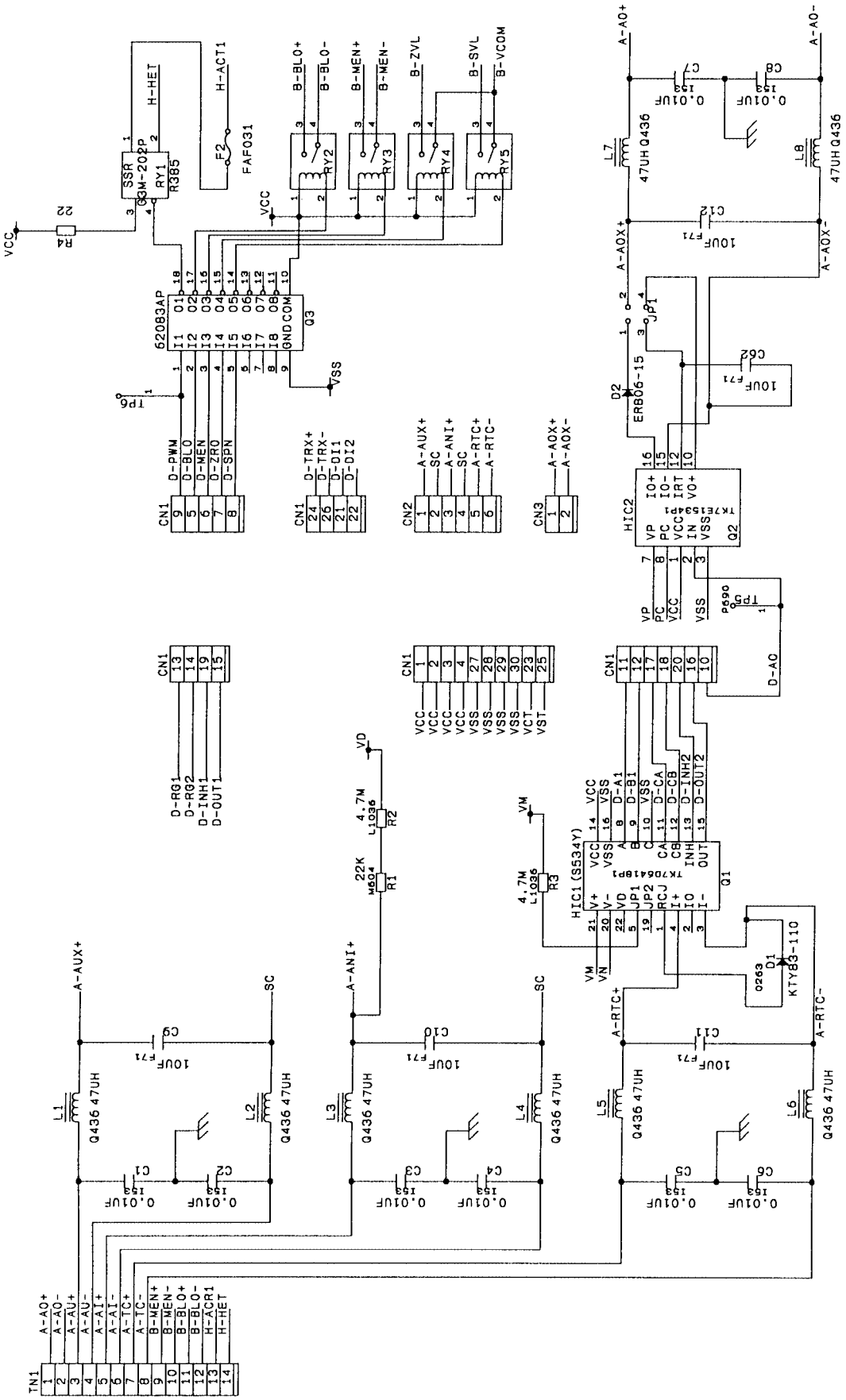
SSR
GSM-20PP
RY1
R385
H-HET
H-ACT1
F2
FAF031
R4
22
VCC
62083AP
GND COM
Q3
VSS
TP6
D-PWM
D-BLO
D-MEN
D-ZRO
D-SPN
CN1
D-TRX+
D-TRX-
D-DI1
D-DI2
A-AUX+
SC
A-ANI+
A-RTC+
A-RTC-
CN2
A-AOX+
A-AOX-
CN3
B-BLO+
B-BLO-
B-MEN+
B-MEN-
B-ZVL
B-SVL
B-VCOM
RY2
RY3
RY4
RY5
A-AO+
A-AO-
C7
C8
0.01UF
L7
L8
47UH Q436
C12
10UF
JP1
C62
D2
ERB06-15
HIC2
TK7E1534P1
Q2
TP5
D-AO
D-RG1
D-RG2
D-INH1
D-OUT1
D-INH2
D-OUT2
HIC1(S534Y)
TK7064BP1
Q1
VD
4.7M
L1036
R2
22K
M604
R1
R3
VM
D1
KTY83-110
C9
C10
C11
L1
L2
L3
L4
L5
L6
Q436 47UH
C1
C2
C3
C4
C5
C6
TN1
A-AO+
A-AO-
A-AU+
A-AU-
A-AI+
A-AI-
A-TC+
A-TC-
B-MEN+
B-MEN-
B-BLO+
B-BLO-
H-ACR1
H-HET

Single O_2 Analyzer Analog/Power Supply Unit (2/3)

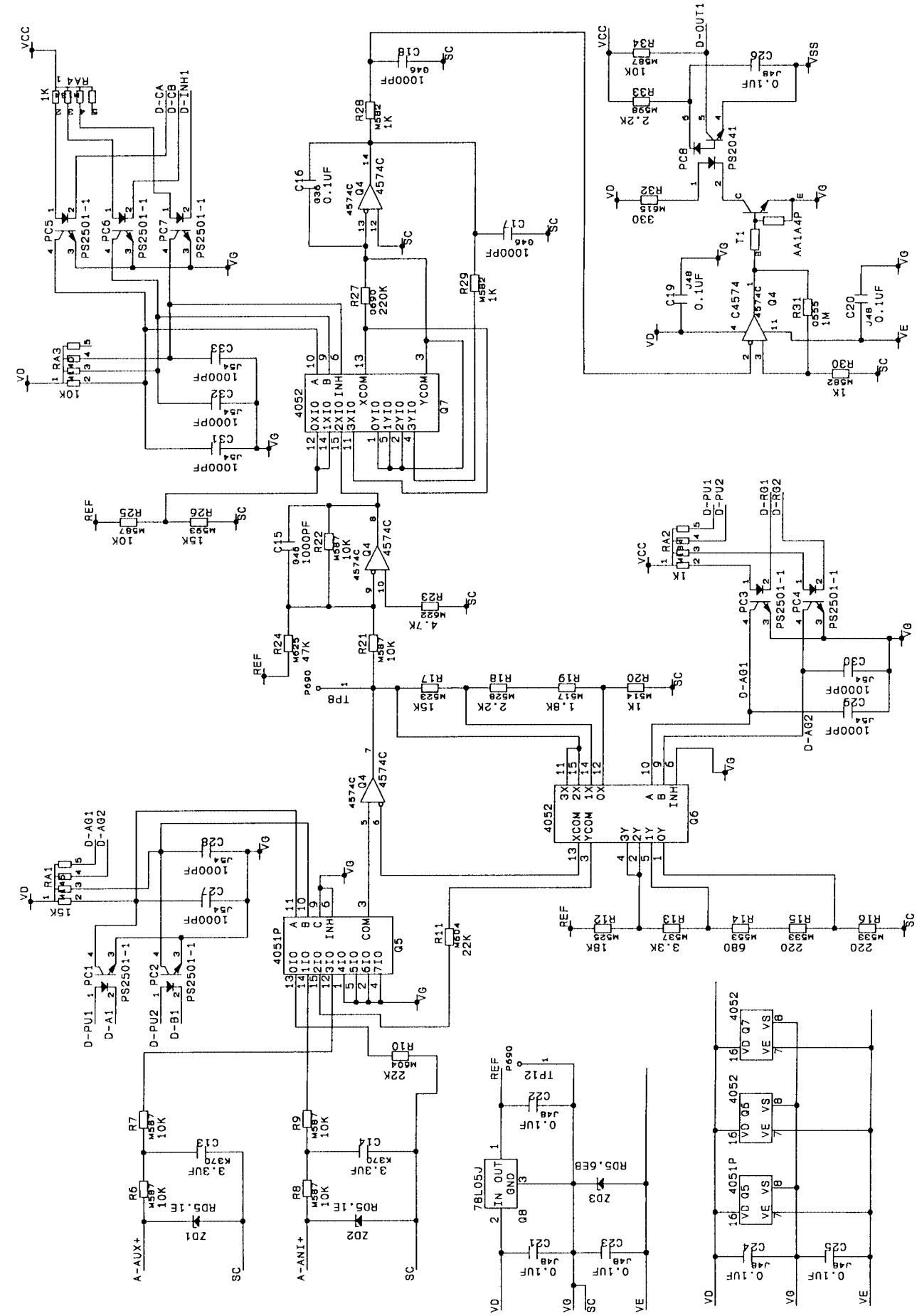

Single O_2 Analyzer Analog/Power Supply Unit (3/3)

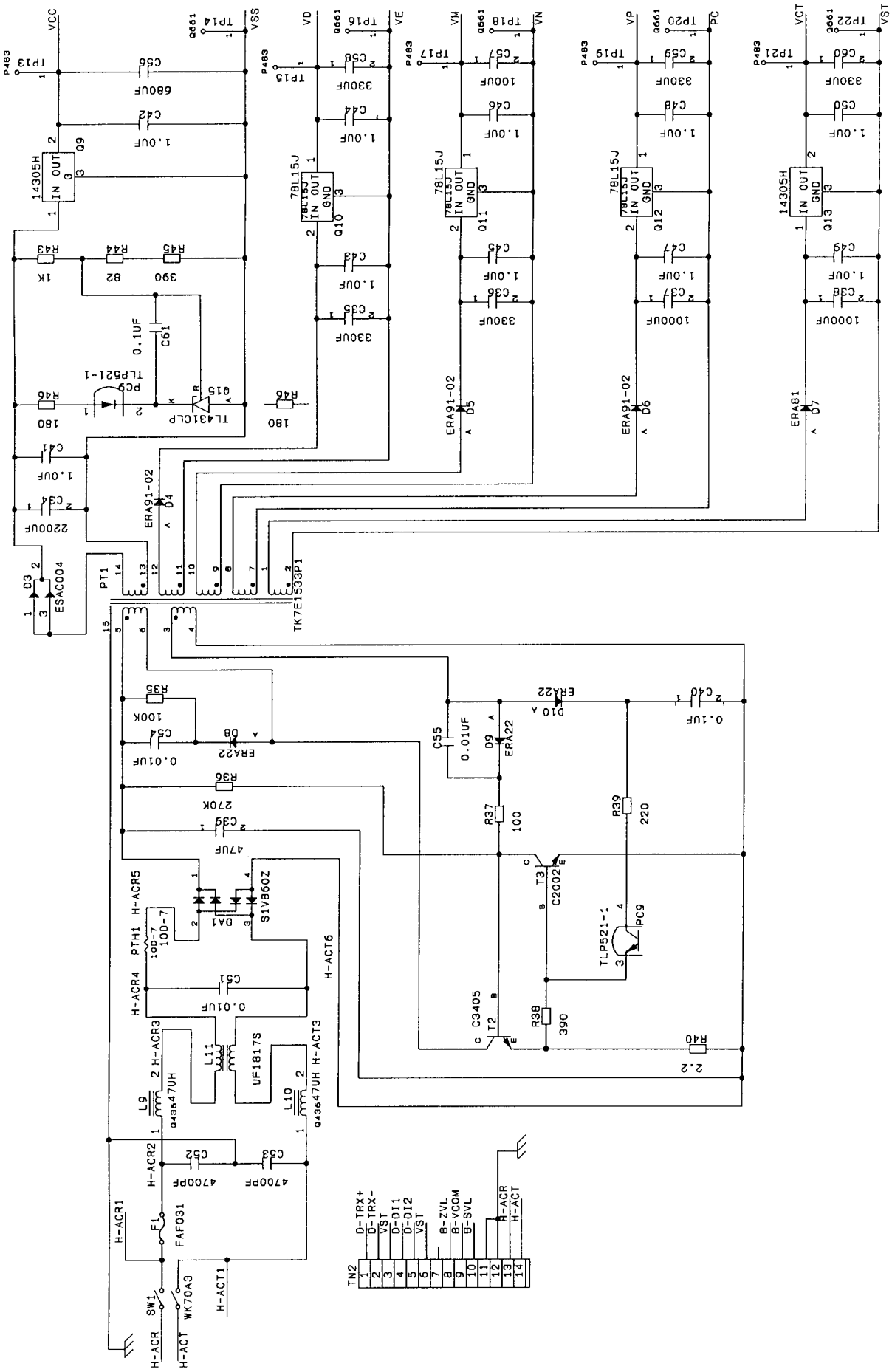

Fuji Electric Systems Co., Ltd.

Head Office
Gate City Ohsaki, East Tower, 11-2, Osaki 1-chome,
Shinagawa-ku, Tokyo 141-0032, Japan
http://www.fesys.co.jp/eng

Instrumentation Div.
International Sales Dept.
No.1, Fuji-machi, Hino-city, Tokyo 191-8502, Japan
Phone: 81-42-585-6201, 6202 Fax: 81-42-585-6187
http://www.fic-net.jp/eng